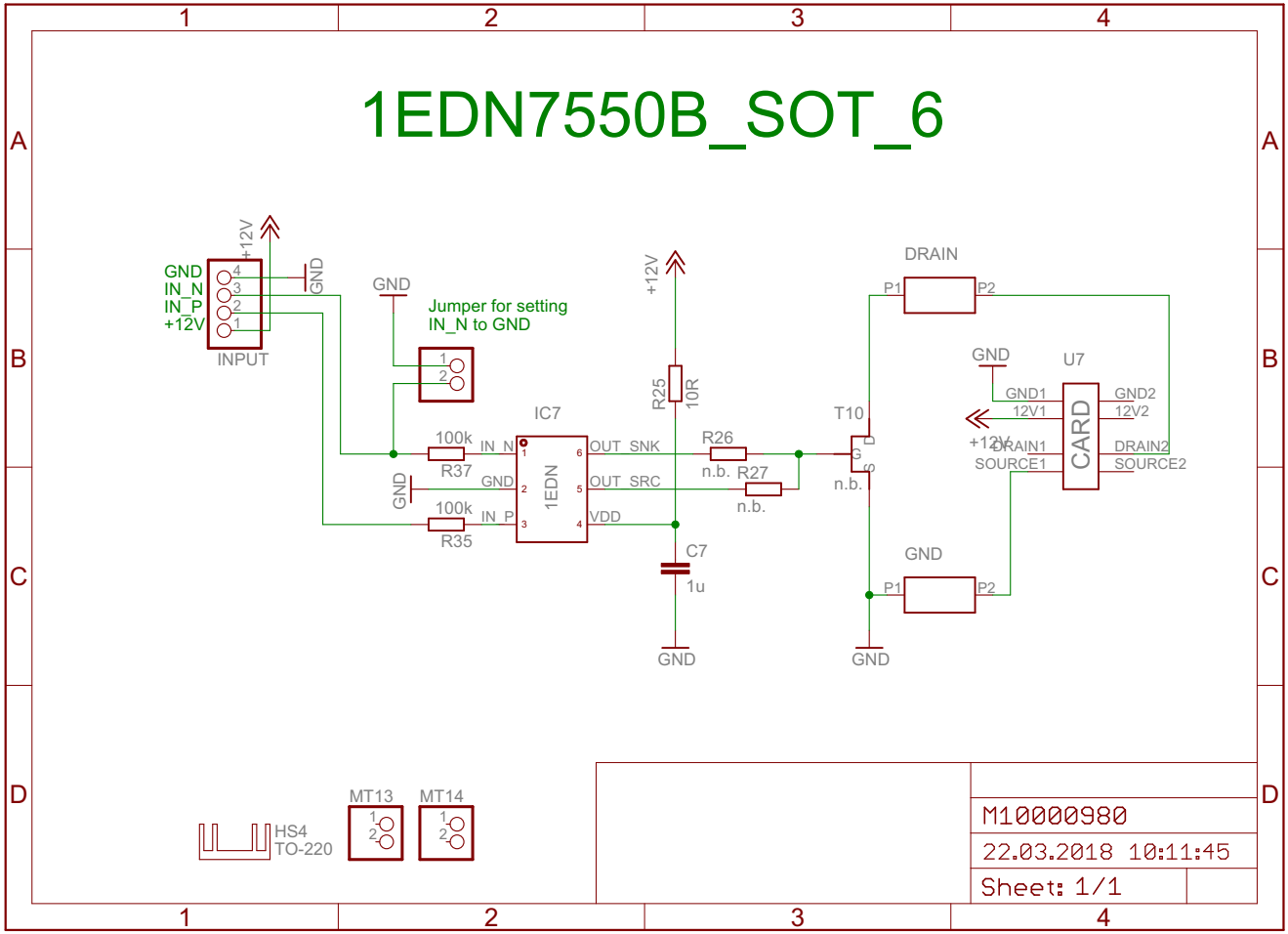
1EDN7550B_SOT_6
GND
IN_N
IN_P
+12V
INPUT
Jumper for setting
IN_N to GND
IC7
1EDN
100k
R37
100k
R35
IN_N
IN_P
GND
OUT_SNK
OUT_SRC
VDD
R26
n.b.
R27
n.b.
R25
10R
C7
1u
T10
DRAIN
P1
P2
U7
CARD
GND1
12V1
DRAIN1
SOURCE1
GND2
12V2
DRAIN2
SOURCE2
MT13
MT14
HS4
TO-220
M10000980
22.03.2018 10:11:45
Sheet: 1/1